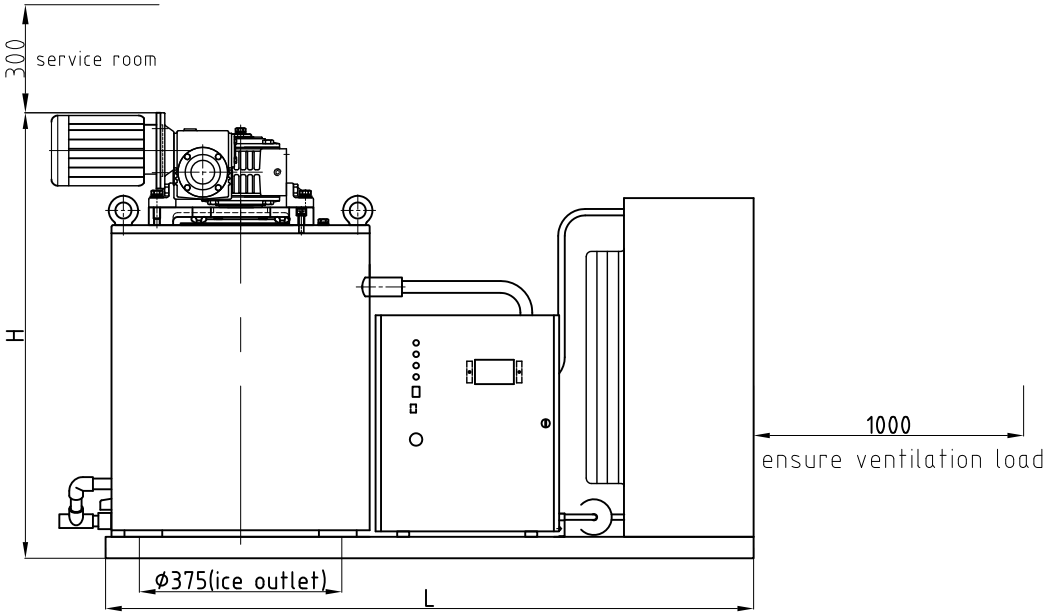

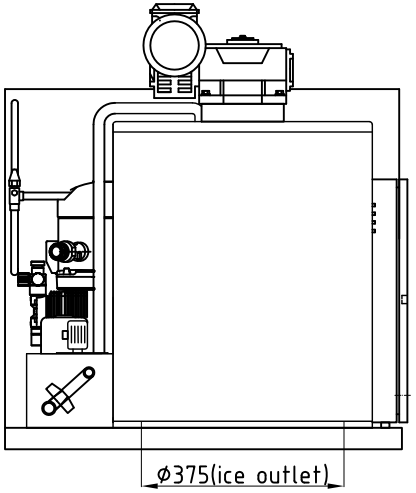

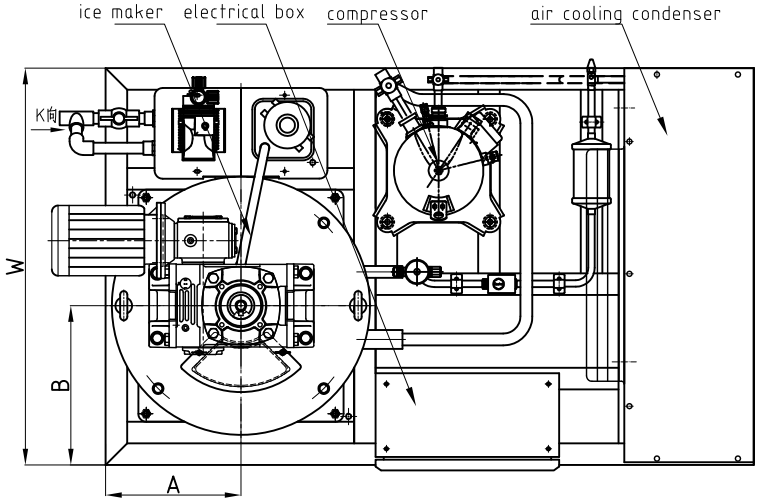

Note:

1. The ice maker unit should be located indoor, and ensure ventilation room surrounding.
2. At least 1m service room surrounding the equipment. The equipment foundation should be burdened by the clients.
3. All water pipelines, cables and refrigeration pipelines should be connected to designated ports by user on site.
4. Unless special instruction, it shall follow standard regulation.
5. The drawing is for your reference only. Supply scope is subject to the Sales Contract.

K View

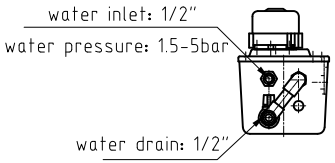

Technical Data:

water-in temp.	16°C
ambient temp.	25°C
wet bulb temp.	20°C
power supply	3P/380V/50Hz
refrigerant	R507A

Model	L(mm)	W(mm)	H(mm)	A(mm)	B(mm)	ice making capacity(t)	water consumption (L/h)	installation power(kW)	power consumption (kW)	net weight (kg)
F050AS	1200	735	639	250	295	0.5	21	2.1	2.0	210
F075AS	1200	735	684	250	295	0.75	31.5	2.5	2.4	230
F10AS-5	1200	735	825	250	295	1.0	42	4.0	3.9	250
F12AS-5	1410	935	825	315	415	1.2	50	4.5	4.4	260

Itemref	Quantity	Title/Name, designation, material, dimension etc			Article No./Reference	
Designed by		Checked by	Approved by - date	File name	Date 2013.01.17	Scale
Recom ICE SYSTEMS		flake ice machine layout drawing(standard)				
		F050AS05 - F12AS-5			Edition	Sheet